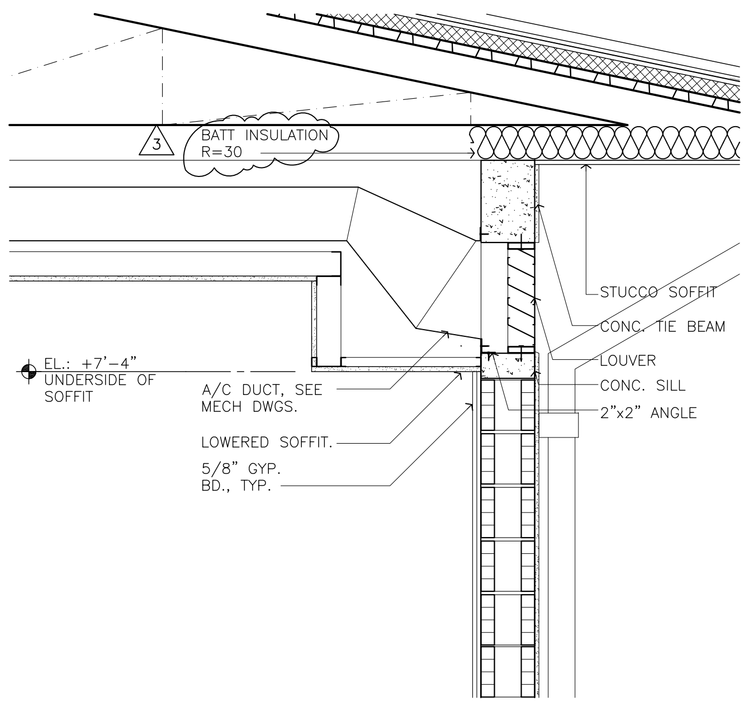

4 A303 **WALL SECTION @ LOUVER**
SCALE: 3/4" = 1'-0"

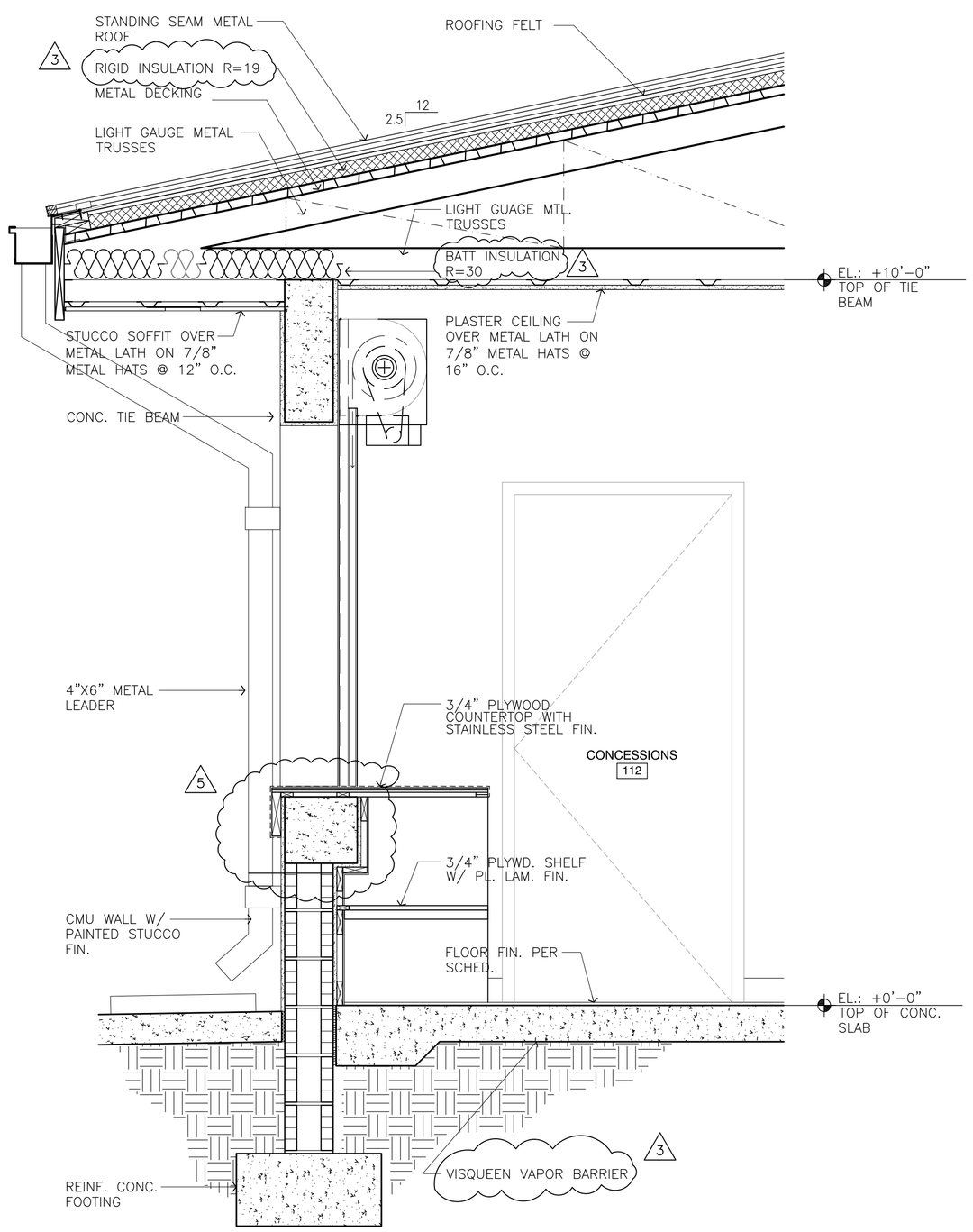

3 A303 **WALL SECTION**
SCALE: 3/4" = 1'-0"

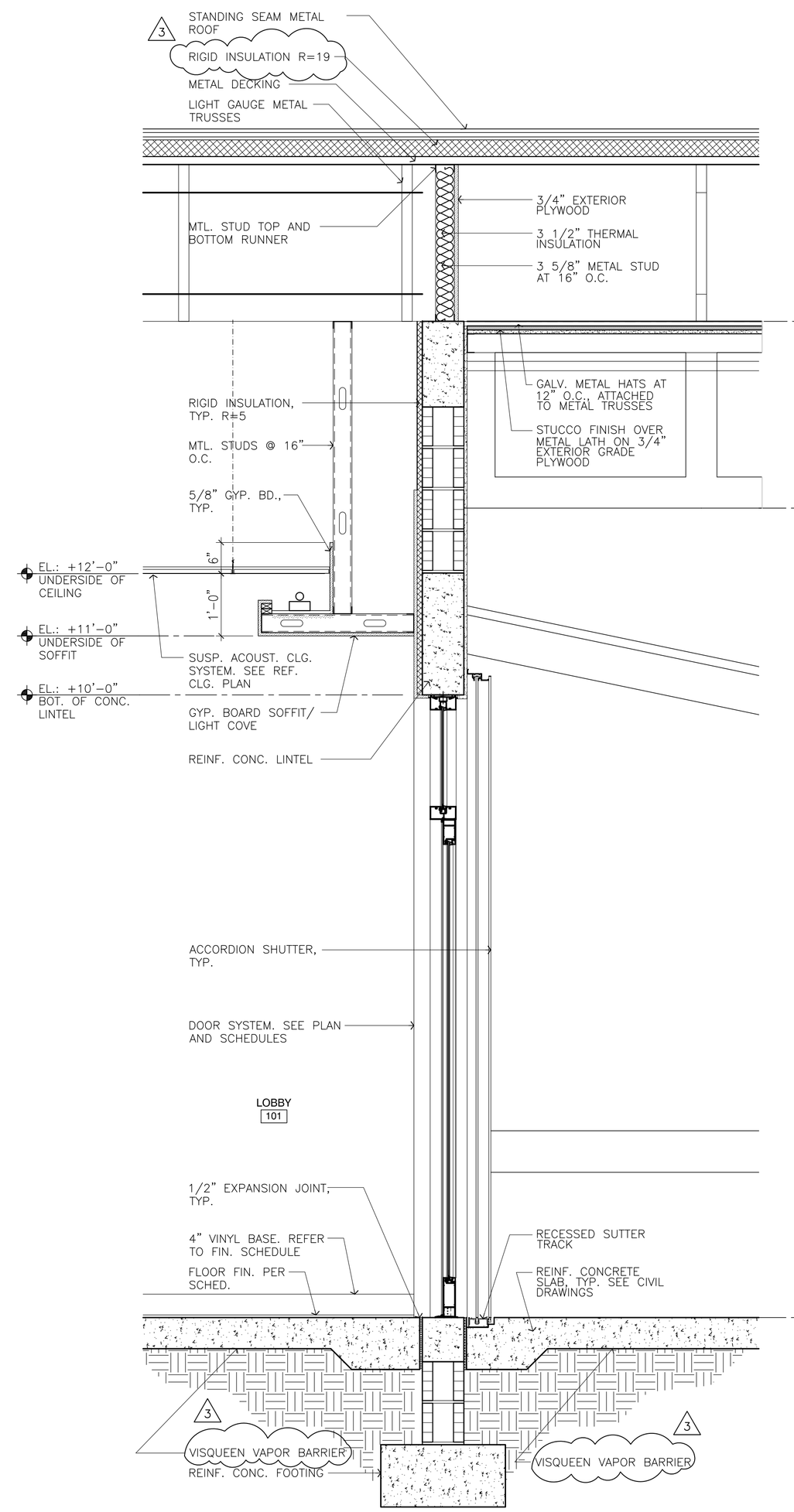

2 A303 **WALL SECTION**
SCALE: 3/4" = 1'-0"

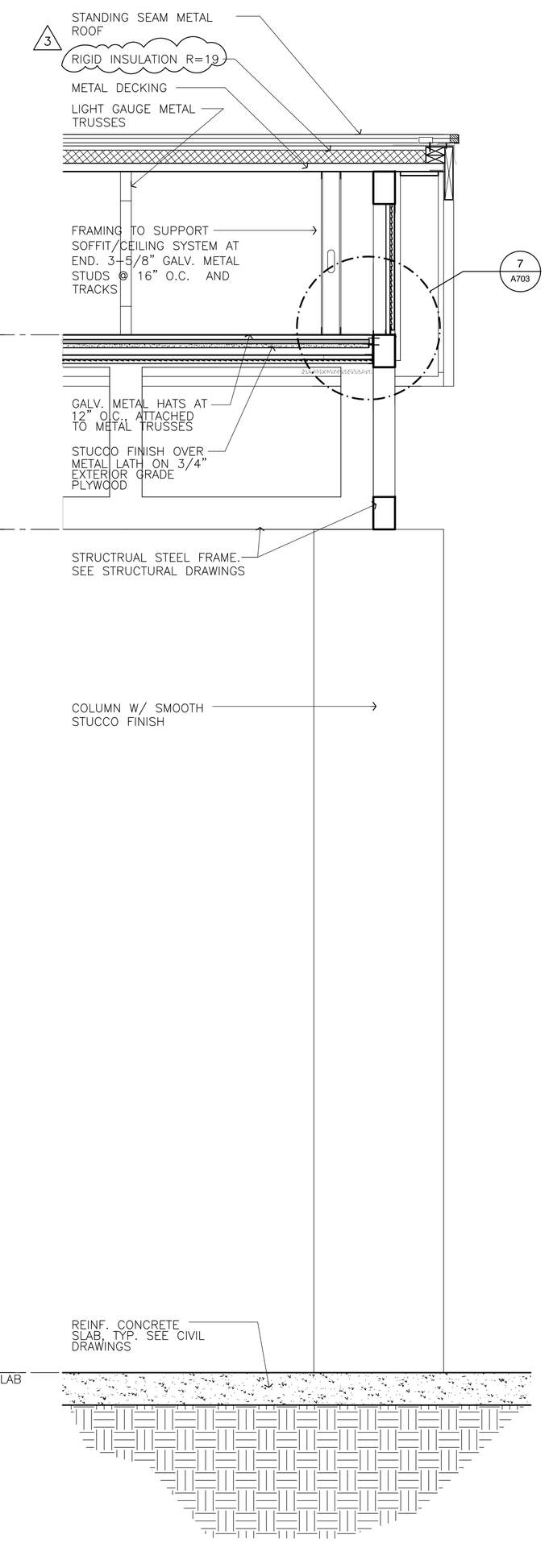

1 A303 **WALL SECTION**
SCALE: 3/4" = 1'-0"

8/13/09 – P:\CITY OF MIAMI\011254.01 R KING HIGH PK\PRODUCTION\01-WORKSET\ARCH\RKHP-A302-303-WSEC.DWG

PBS&J
2001 NW 107TH AVE.
MIAMI, FL 33172-2507
PHONE: 305.592.7275 FAX: 305.597.0229
FBPR CERTIFICATE OF AUTHORIZATION NO.: 24

CONSULTANT:

JALRW
JOHNSON, AVEDANO, LOPEZ, RODRIGUEZ & WALEWSKI ENGINEERING GROUP, INC.
2510 NORTHWEST 97th AVENUE, SUITE 220 MIAMI, FLORIDA 33172
TELEPHONE:(305)594-0660 www.jalrw.com FAX:(305)594-0907

STATE OF FLORIDA
CERTIFICATE OF AUTHORIZATION
NUMBER: 4290

CLIENT / PROJECT NAME:

CITY OF MIAMI
ROBERT KING HIGH PARK
NEW BUILDING & SITE IMPROVEMENTS
7025 W. FLAGLER STREET, MIAMI, FLORIDA

GENERAL NOTES:

SHEET ISSUE:

MARK	DATE	DESCRIPTION
2	03/03/08	AS PER OWNERS COMMENTS
3	09/30/08	BUILDING DEPARTMENT COMMENTS
5	08/12/09	ADDENDUM

PROFESSIONAL SEAL:

ARCHITECT OF RECORD:
CRISTINA FANDINO
REG. NO.: 0014682

NOT VALID FOR CONSTRUCTION UNLESS SIGNED IN THIS BOX

SHEET TITLE:
WALL SECTIONS

SHEET INFORMATION:

JOB NO.:	011524.01	DATE ISSUED:	05/22/09
FILE NAME:		SHEET NUMBER:	A303
DRAWN BY:	E.D.		
CHECKED BY:	S.J.		
QC REVIEW:	C.A.		