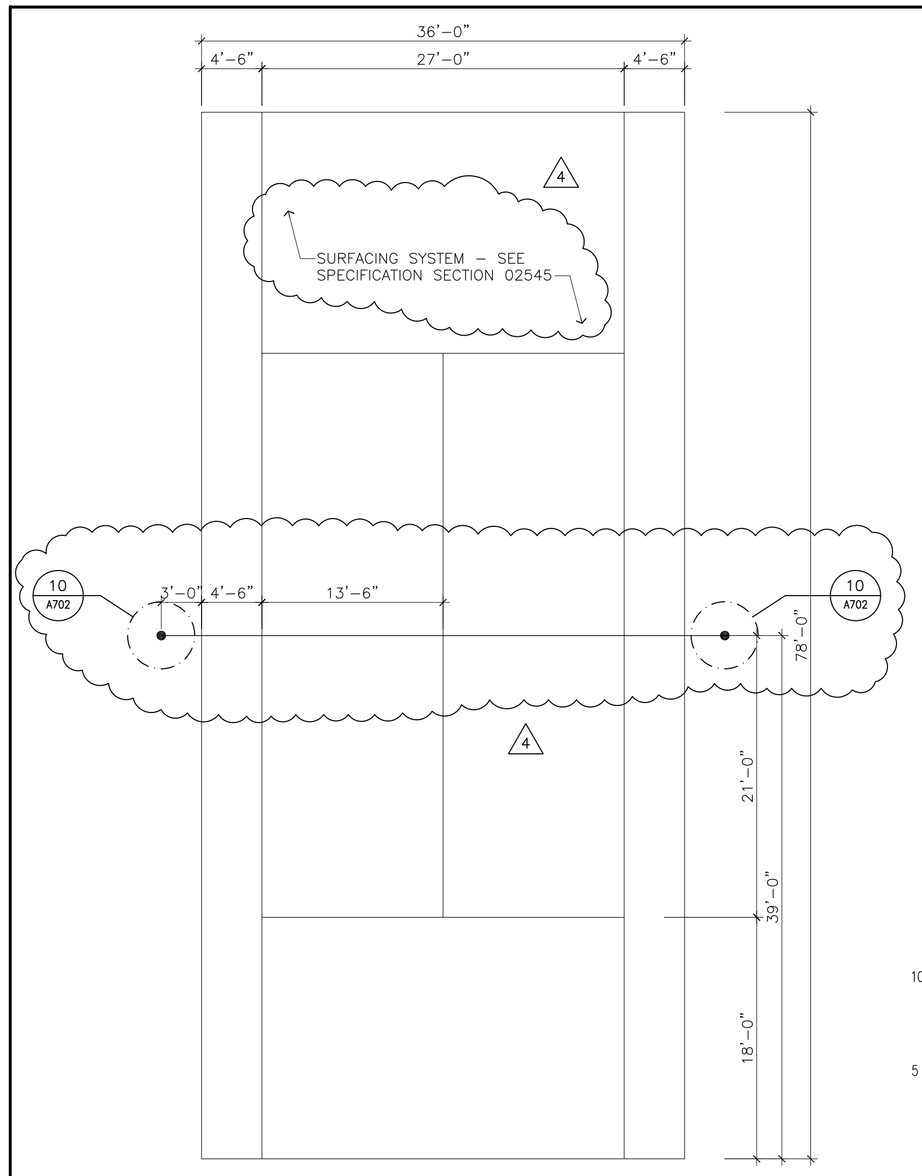

9 A702 **TENNIS COURT PLAN**
SCALE: 1/8" = 1'-0"

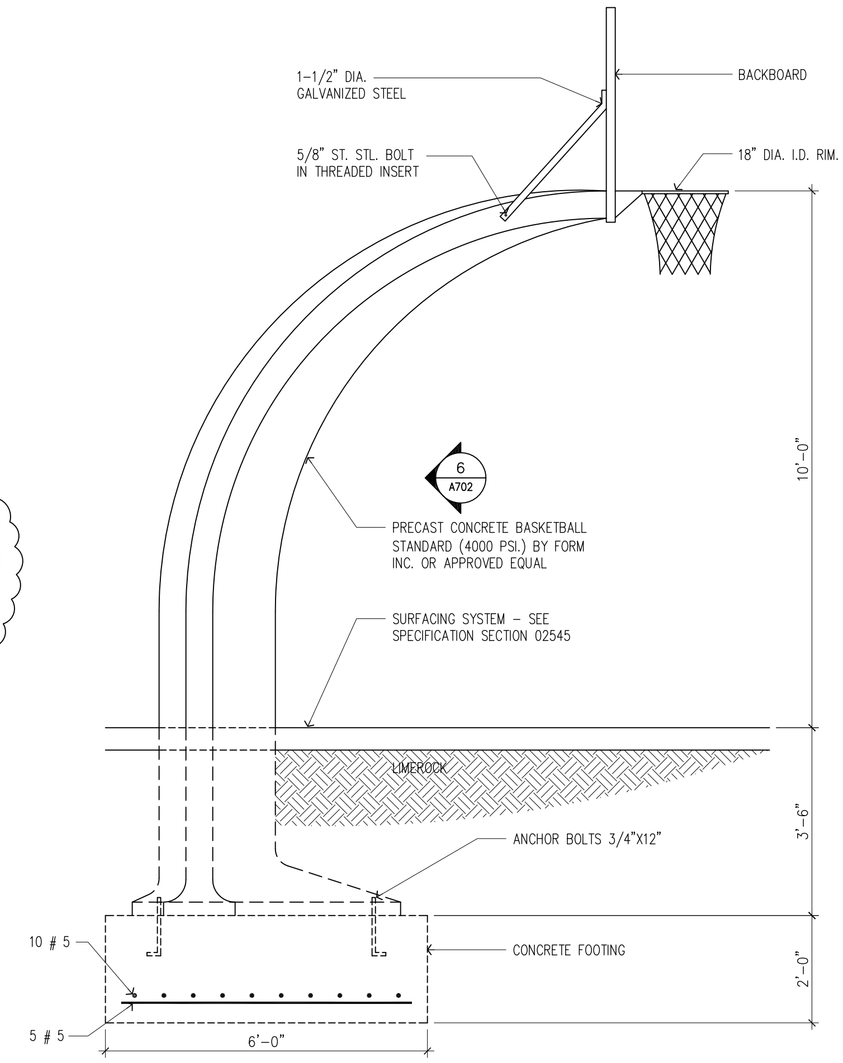

7 A702 **BASKETBALL ELEVATION/SECTION**
SCALE: 1/2" = 1'-0"

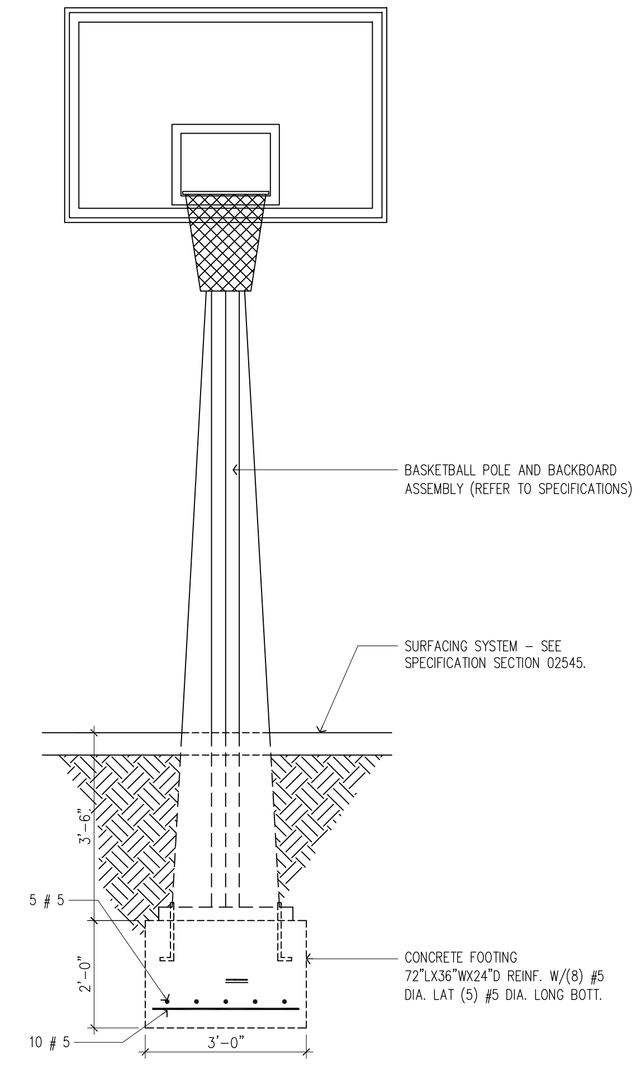

6 A702 **BASKETBALL ELEVATION**
SCALE: 1/2" = 1'-0"

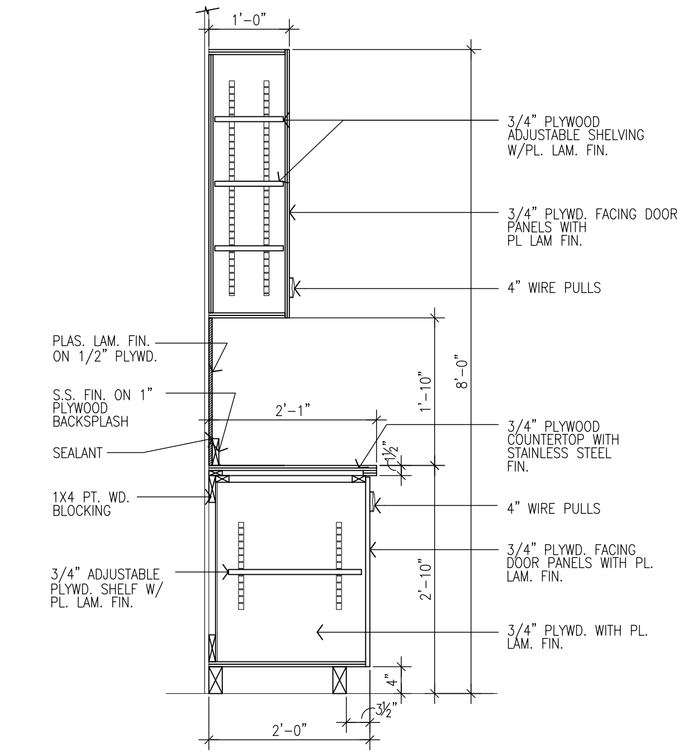

3 A702 **CABINET SECTION**
SCALE: 3/4" = 1'-0"

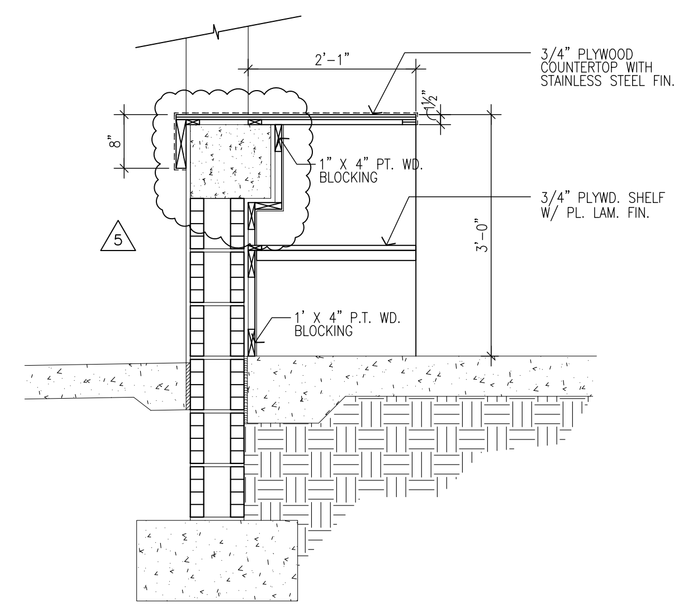

2 A702 **CABINET SECTION**
SCALE: 3/4" = 1'-0"

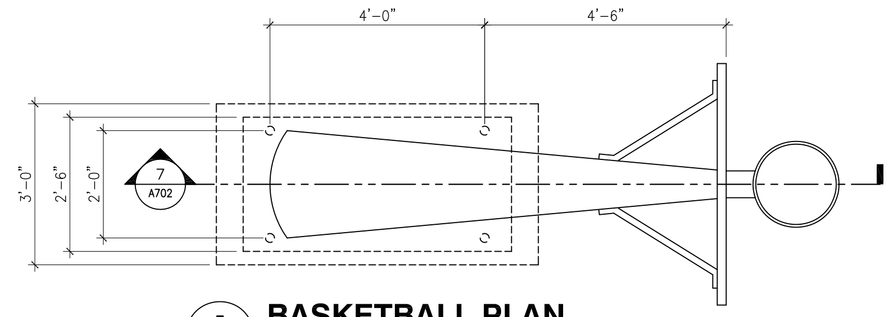

5 A702 **BASKETBALL PLAN**
SCALE: 1/2" = 1'-0"

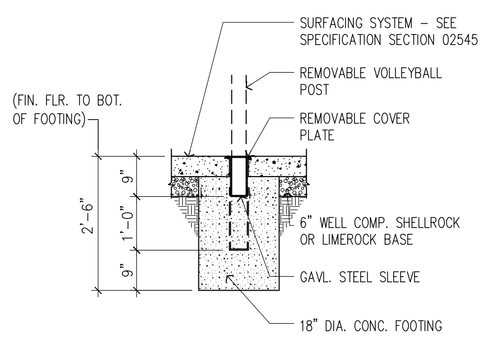

8 A702 **VOLLEYBALL POST DETAIL**
SCALE: 1/2" = 1'-0"

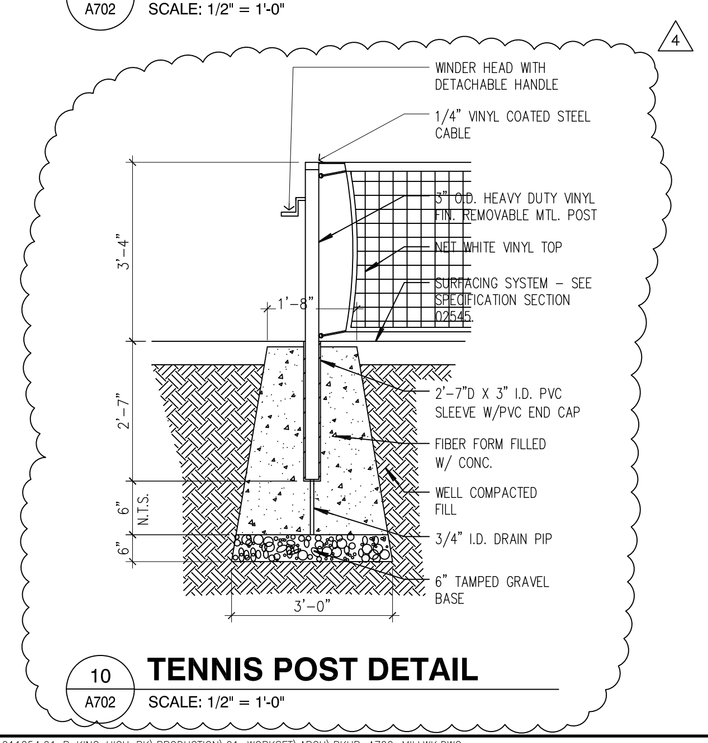

10 A702 **TENNIS POST DETAIL**
SCALE: 1/2" = 1'-0"

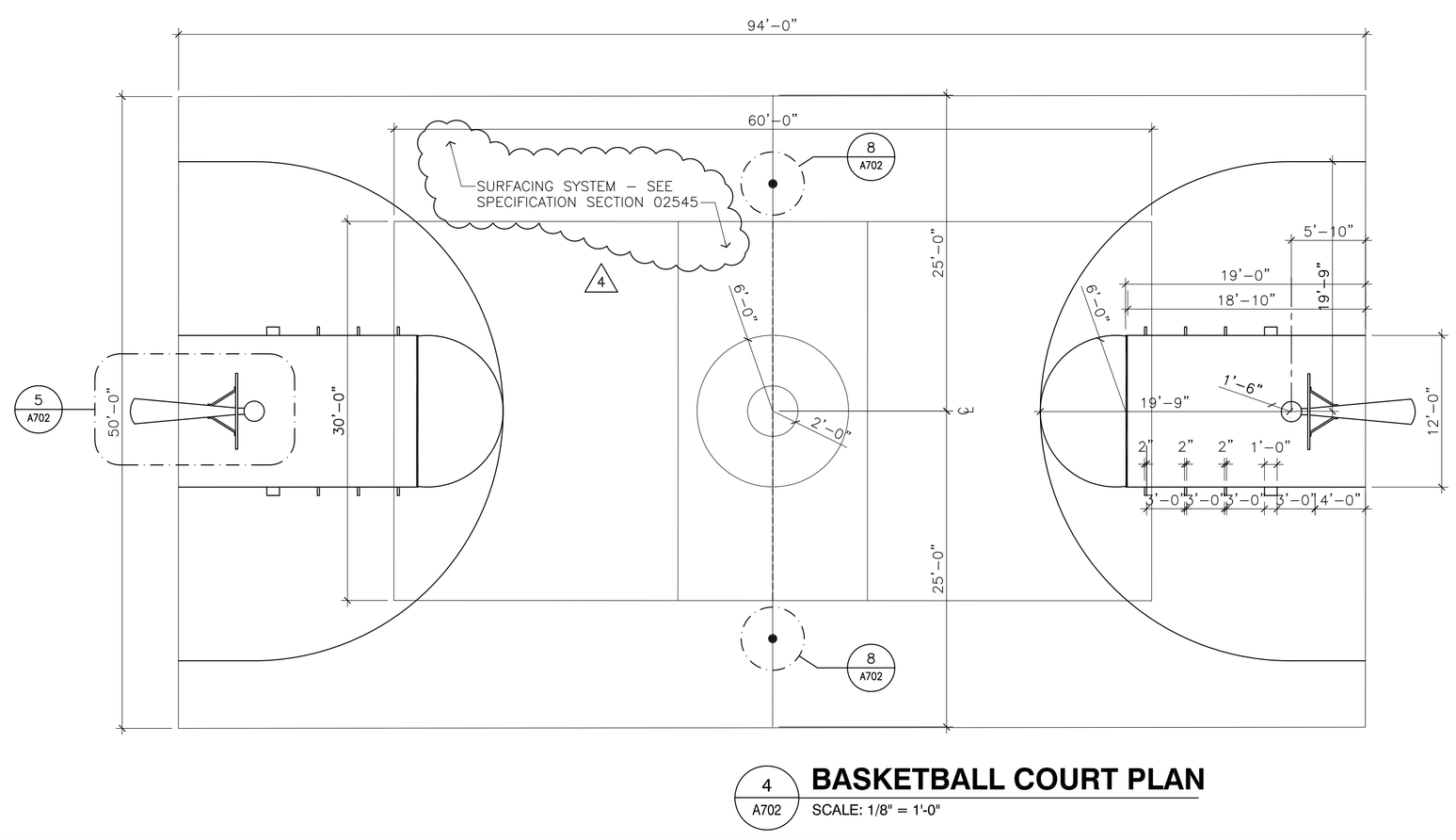

4 A702 **BASKETBALL COURT PLAN**
SCALE: 1/8" = 1'-0"

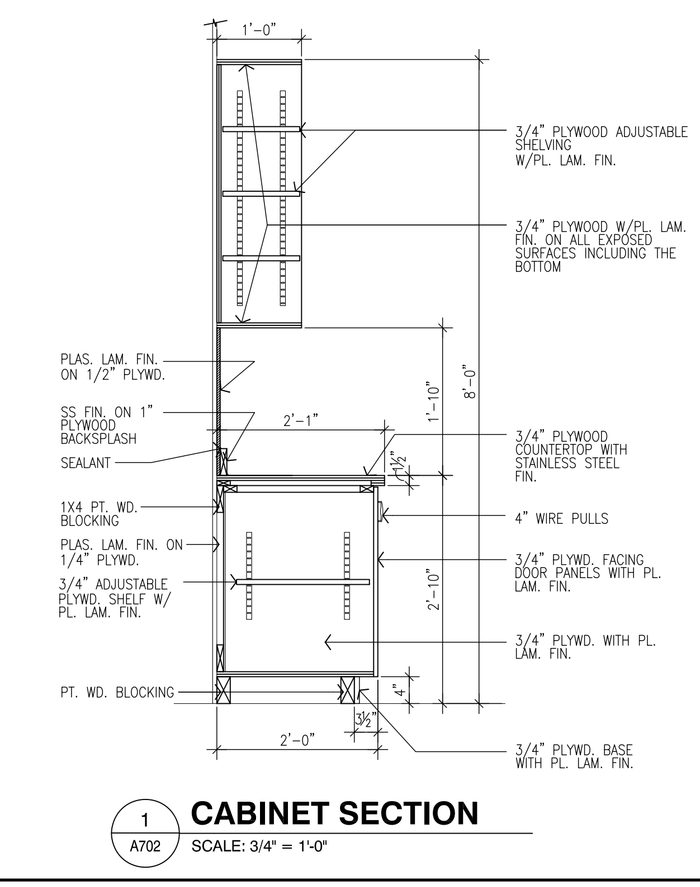

1 A702 **CABINET SECTION**
SCALE: 3/4" = 1'-0"

PBS&J
2001 NW 107TH AVE.
MIAMI, FL 33172-2507
PHONE: 305.592.7275 FAX: 305.597.0229
FBPR CERTIFICATE OF AUTHORIZATION NO.: 24

CONSULTANT:

JALRW
JOHNSON, AVEDANO, LOPEZ, RODRIGUEZ & WALEWSKI ENGINEERING GROUP, INC.
2510 NORTHWEST 97th AVENUE, SUITE 220 MIAMI, FLORIDA 33172
TELEPHONE:(305)594-0660 www.jalrw.com FAX:(305)594-0907

STATE OF FLORIDA
CERTIFICATE OF AUTHORIZATION
NUMBER: 4290

CLIENT / PROJECT NAME:

CITY OF MIAMI
ROBERT KING HIGH PARK
NEW BUILDING & SITE IMPROVEMENTS
7025 W. FLAGLER STREET, MIAMI, FLORIDA

GENERAL NOTES:

SHEET ISSUE:

MARK	DATE	DESCRIPTION
2	03/03/08	AS PER OWNERS COMMENTS
4	05/28/09	AS PER OWNERS COMMENTS
5	8/12/09	ADDENDUM

PROFESSIONAL SEAL:

ARCHITECT OF RECORD:

CRISTINA FANDINO
REG. NO.: 0014682

NOT VALID FOR CONSTRUCTION UNLESS SIGNED IN THIS BOX

SHEET TITLE:

MILLWORK AND MISCELLANEOUS DETAILS

SHEET INFORMATION:

JOB NO.:	011524.01	DATE ISSUED:	05/22/09
FILE NAME:		SHEET NUMBER:	A702
DRAWN BY:	E.D.		
CHECKED BY:	S.J.		
QC REVIEW:	C.A.		